Olympic® 135

	OLYMPIC 135
Boat size	**Sailboat as from 9 m (30 ft+)**
Compass card	Flat card, graduated every 5°. Apparent Ø 130 mm. Heading numerals every 30°.
Hood/sunshade	Unique articulated protective hood : built-in sliding cover, composed of 3 telescopic parts.
Mounting	Pedestal mounting or minimal height flush mounting. Choice of 2 binnacles (96 mm high) ; Pedestal Ø 175 mm.
Lubber lines	3 lubber lines, at 45°.
Compensation	Supplied as standard.
Lighting	12 or 24 Vdc. 2 bulbs : red lighting on black card, white lighting on red card.
Supplied with	Drilling template
Homologation	SOLAS-MED 96/98

Stylish design : articulated protective hood that slides shut, opening and closing click-stop.

Tunnel rods provide easy access to compensators through the binnacle.

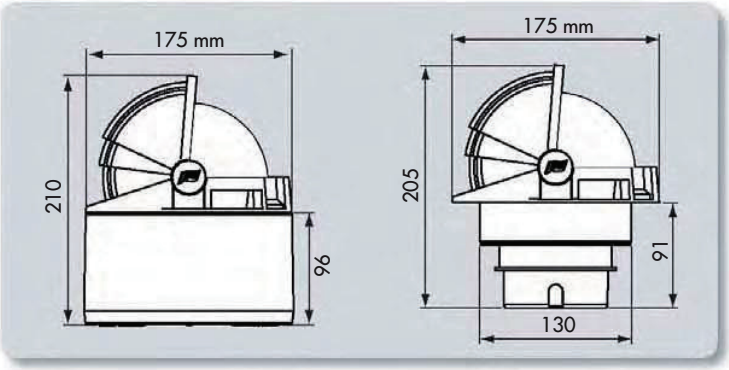

OLYMPIC 135	Compass alone	Compass + white binnacle set	Binnacle alone
• BLACK COMPASS			White plastic : **10301** Polished st. steel : **17283**
red card	**17282**	**10302**	
black card	**17281**	**14408**	
• WHITE COMPASS			
red card	**17286**	**14078**	
black card	**17285**	**14412**	

Options & accessories

- ***Flushmount kit : 11781***
  Ensures fully watertight flushmount installation.
- ***Mounting kit for Goïot P 1077 : 11466***
- ***Whitlock binnacle for compensable Olympic 135 : 42131***